BBC CELLPACK
Electrical Products

Heat shrinkable straight-through joint

for unarmoured polymeric cables

Universally suitable for connecting polymeric cables or conductors insulated with PVC, PE and XLPE (e.g. N(A)YY, NYM, TT). Suitable for compression connectors on aluminium or copper cables.

Product description

Article name	SMH4 95-300
Article number	145342
Optional accessory	Compression connectors (see Connecting technology)

Characteristics
Compact dimensions
Wide conductor and cross-section range
Resistant to chemical agents
Resistant to alkaline earth elements
Stabilized against UV rays
Free from paint-wetting inhibiting substances
Halogen-free
Transversely waterproof
High electrical insulating values
High mechanical strength

Applications
Indoor
Outdoor
Underground
Water
Installation ducts
Ductwork

Technical data

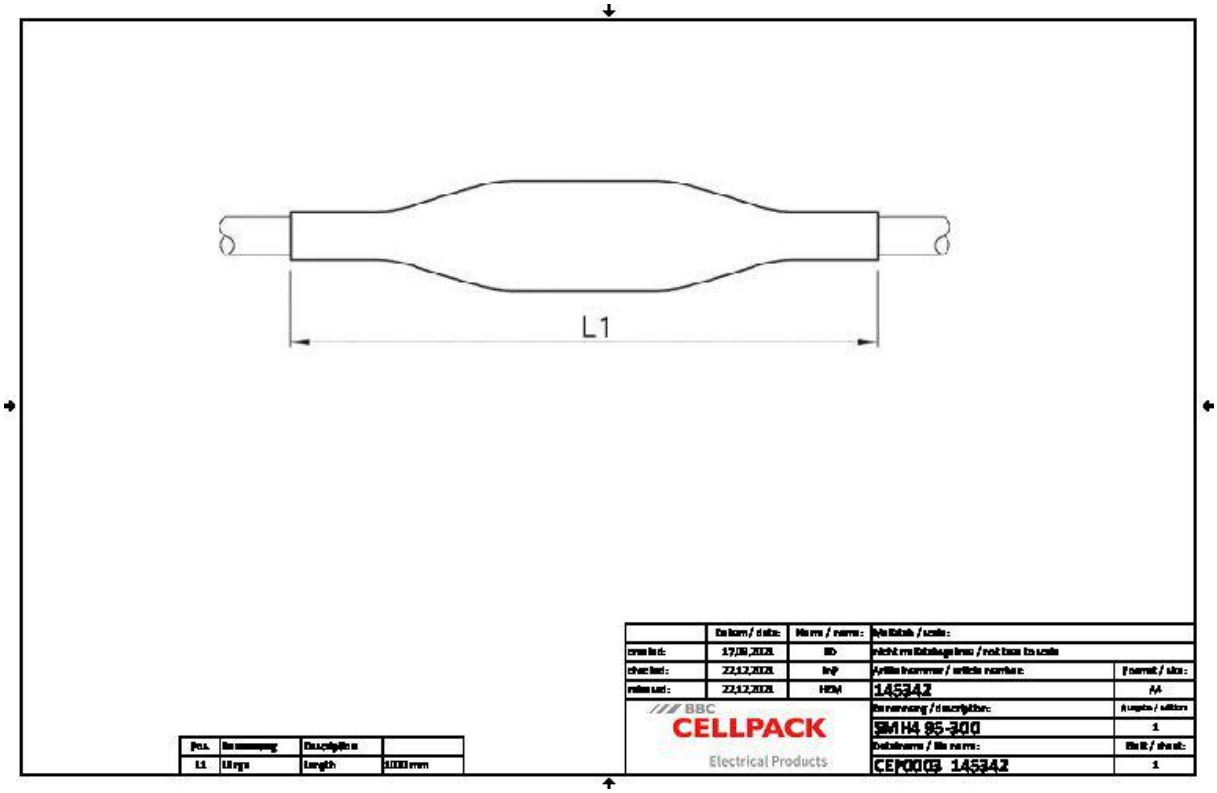

Article name	SMH4 95-300
Article number	145342
Voltage levels	U0/U (Um) 0,6/1 (1,2) kV
Test standards	EN 50393
Length L1	1000 mm
Nominal cross section Polymeric cable unarmoured per conductor 4x min	95 mm²
Nominal cross section Polymeric cable unarmoured per conductor 4x max	300 mm²

Logistics data

Article name	SMH4 95-300
Article number	145342
Delivery scope	Outer sleeve
	Inner sleeves
	Cleaning tissue
	Emery cloth
	Assembly instructions
Shelf life description	Unlimited shelf life
Country of origin	Germany
Customs tariff number	39173900
EAN/GTIN	4010311000305

Packaging data

Alternative unit of measure	Bag1	Pal. OW
Base quantity	1	50
Base unit of measure	Piece	Piece
Lenght (mm)	1073	1200
Width (mm)	187	800
Height (mm)	112	1130
Net weight (kg)	1.063	53.15
Gross weight (kg)	1.063	71.35