BBC CELLPACK
Electrical Products

Heat shrinkable straight-through joint

for unarmoured polymeric cables

Universally suitable for connecting polymeric cables or conductors insulated with PVC, PE and XLPE (e.g. N(A)YY, NYM, TT). Suitable for compression connectors on aluminium or copper cables.

Product description

Article name	SMH5 1.5-6
Article number	145255
Optional accessory	Compression connectors (see Connecting technology)

Characteristics
Compact dimensions
Wide conductor and cross-section range
Resistant to chemical agents
Resistant to alkaline earth elements
Stabilized against UV rays
Free from paint-wetting inhibiting substances
Halogen-free
Transversely waterproof
High electrical insulating values
High mechanical strength

Applications
Indoor
Outdoor
Underground
Water
Installation ducts
Ductwork

Technical data

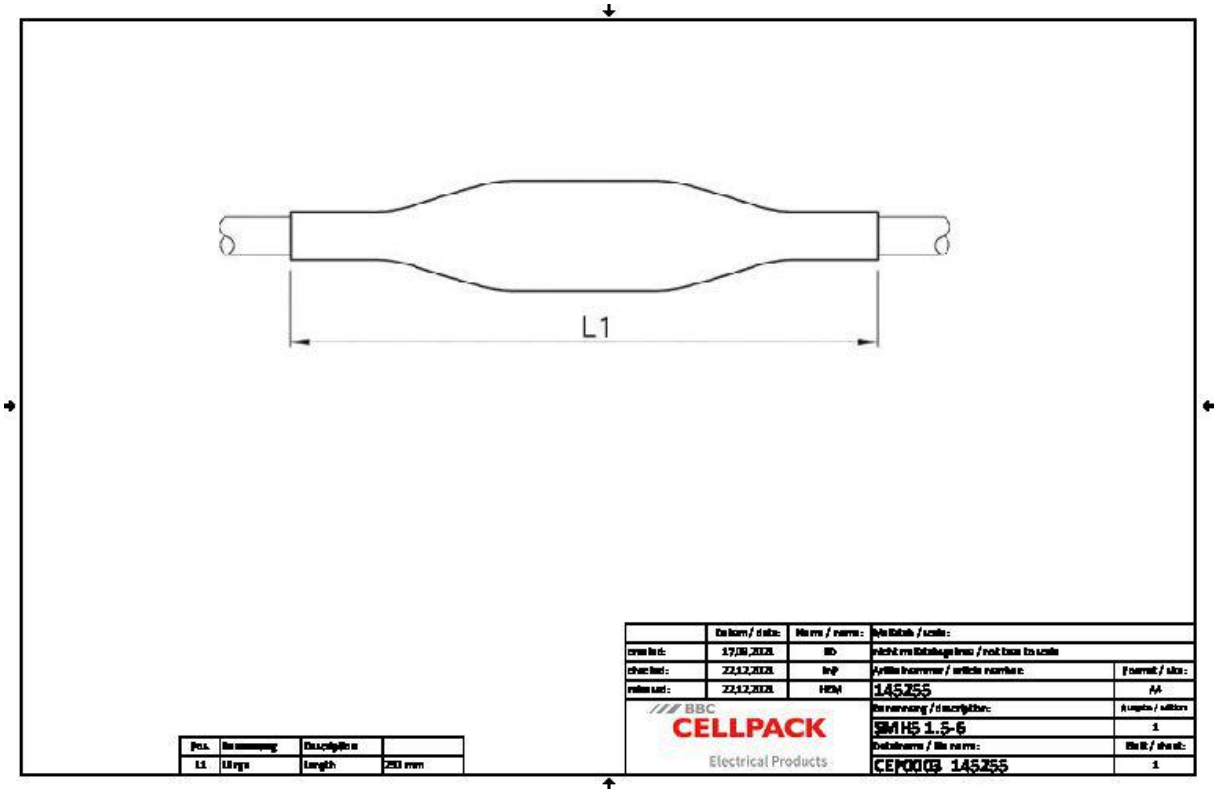

Article name	SMH5 1.5-6
Article number	145255
Voltage levels	U0/U (Um) 0,6/1 (1,2) kV
Test standards	EN 50393
Length L1	250 mm
Nominal cross section Polymeric cable unarmoured per conductor 5x min	1.5 mm²
Nominal cross section Polymeric cable unarmoured per conductor 5x max	6 mm²

Logistics data

Article name	SMH5 1.5-6
Article number	145255
Delivery scope	Outer sleeve
	Inner sleeves
	Cleaning tissue
	Emery cloth
	Assembly instructions
Shelf life description	Unlimited shelf life
Country of origin	Germany
Customs tariff number	39173900
EAN/GTIN	4010311000312

Packaging data

Alternative unit of measure	Bag1	Case	Pal. EU
Base quantity	1	10	360
Base unit of measure	Piece	Piece	Piece
Lenght (mm)	293	420	1200
Width (mm)	152	250	800
Height (mm)	37	140	1130
Net weight (kg)	0.051	0.51	18.36
Gross weight (kg)	0.051	0.81	30.836