BBC CELLPACK
Electrical Products

Heat shrinkable straight-through joint

with screw connectors for unarmoured polymeric cables and conductors

Universally suitable for connecting polymeric cables or conductors insulated with PVC, PE and XLPE (e.g. N(A)YY, NYM, TT). With screw connectors with grub screw,suitable for aluminium and copper conductors.

Product description

Article name	SMH4 1.5-6 V
Article number	348812

Characteristics
Compact dimensions
Wide conductor and cross-section range
Resistant to chemical agents
Resistant to alkaline earth elements
Stabilized against UV rays
Free from paint-wetting inhibiting substances
Halogen-free
Transversely waterproof
High electrical insulating values
High mechanical strength

Applications
Indoor
Outdoor
Underground
Water
Installation ducts
Ductwork

Technical data

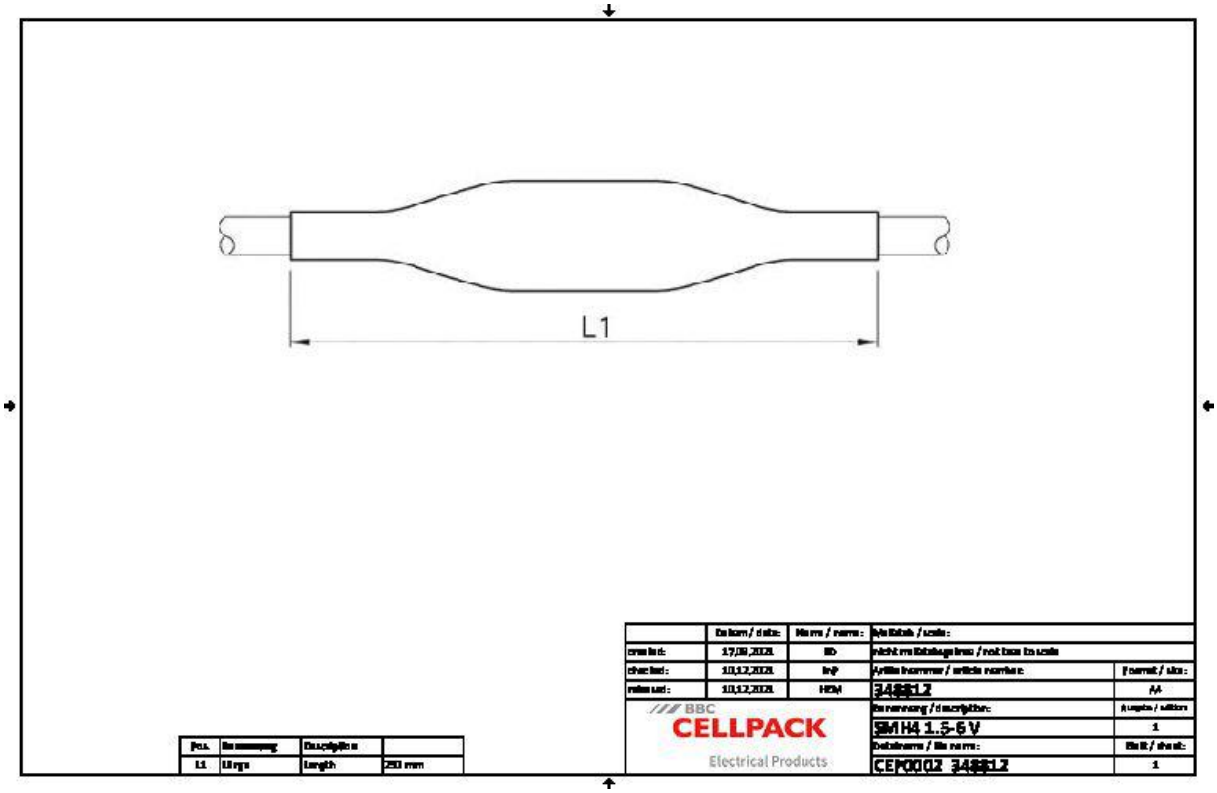

Article name	SMH4 1.5-6 V
Article number	348812
Voltage levels	U0/U (Um) 0,6/1 (1,2) kV
Test standards	EN 50393
Length L1	250 mm
Nominal cross section Polymeric cable unarmoured per conductor 4x min	1.5 mm²
Nominal cross section Polymeric cable unarmoured per conductor 4x max	6 mm²

Logistics data

Article name	SMH4 1.5-6 V
Article number	348812
Delivery scope	Outer sleeve
	Inner sleeves
	Screw connector
	Allen key
	Cleaning tissue
	Emery cloth
	Assembly instructions
Shelf life description	Unlimited shelf life
Country of origin	Germany
Customs tariff number	39173900
EAN/GTIN	4010311169552

Packaging data

Alternative unit of measure	Bag1	Carton
Base quantity	1	10
Base unit of measure	Piece	Piece
Lenght (mm)	298	420
Width (mm)	121	250
Height (mm)	57	140
Net weight (kg)	0.086	0.86
Gross weight (kg)	0.086	1.16